SilverLine

SLK046
BRABHAM FORD BT44B
GERMAN G.P. 1976
Rolf Stommelen
"Warsteiner"

TAMEO KITS srl

Via Valle, 25/6
17022 BORGIO VEREZZI SV ITALY
Tel. 39 019 - 615.250 Fax. 39 019 - 615.310
website www.tameokits.com
e-mail technical@tameokits.com
e-mail sales@tameokits.com

Made in Italy. Collector 1/43 Scale Models. Vietata la vendita ai minori di 14 anni.
Nocivo per ingestione. Conservare fuori dalla portata dei bambini.
Tameo Kits declina ogni responsabilità per un uso improprio del prodotto.

Made in Italy. Collector 1/43 Scale Models. Not for sale to persons under 14 years of age.
Dangerous if swallowed.Keep out of reach of children.
Tameo Kits not held responsable for any damage
or injury resulting from improper use of the product.

Made in Italy. Collector 1/43 Scale Models. Vente interdite aux enfants de moins de 14 ans.
Dangereux si avalé. Conserver hors de la portée des enfants.
Tameo Kits décline toute responsabilité dans le cas
de dommages dérivants de l'usage non approprié du produit

Made in Italy. Collector 1/43 Scale Models. Verkauf an judendliche unter 14 Jahren verboten.
Schadlich bei Einnahme. Von Kindern ferhalten.
Tameo Kits Lehnt jene Verantwortung bei unkorrektem Gebraucht seines Produktes ab.

HOW TO DRILL

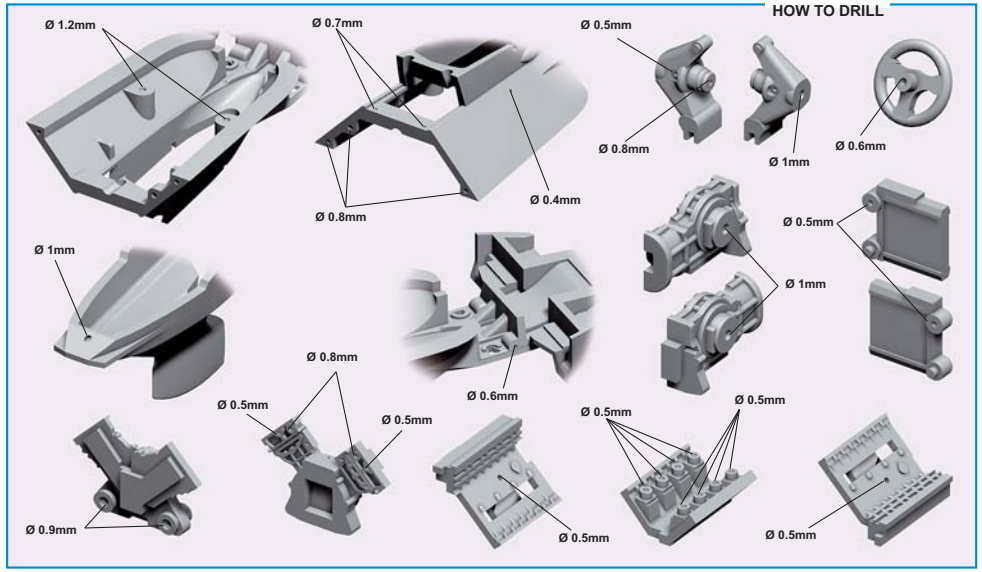

COLOURS CONVERSION

SEMI GLOSS BLACK TAMIYA X18	SILVER TAMIYA X11	RED TAMIYA X-7	GUN METAL TAMIYA XF10	FLAT BLUE TAMIYA XF 8	FLAT RED TAMIYA XF-7

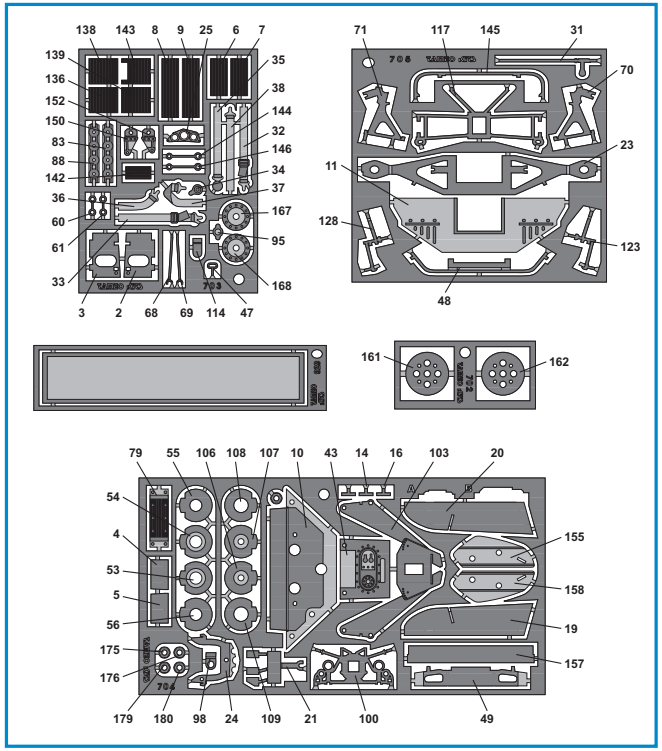

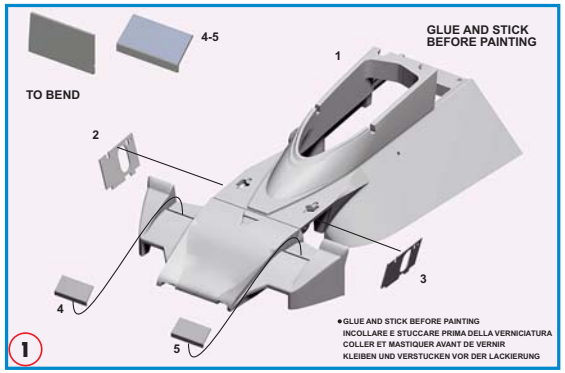

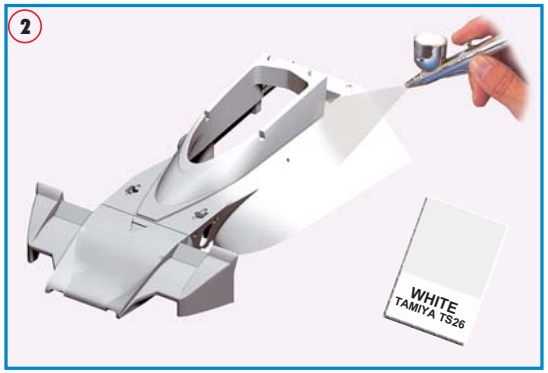

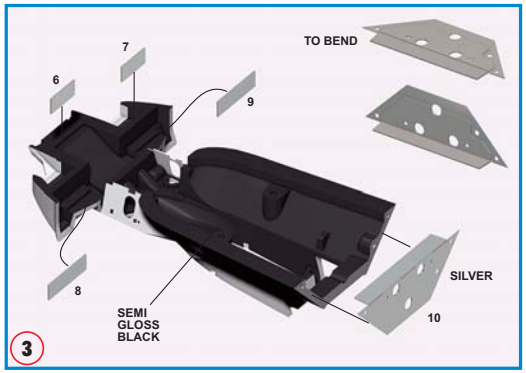

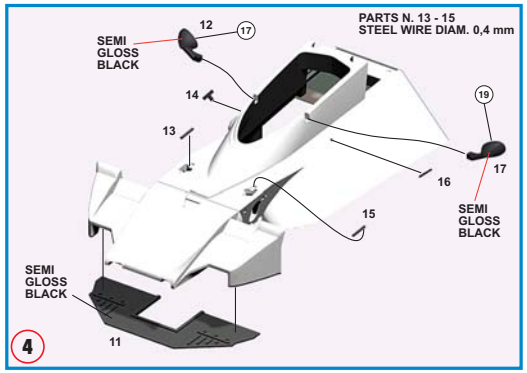

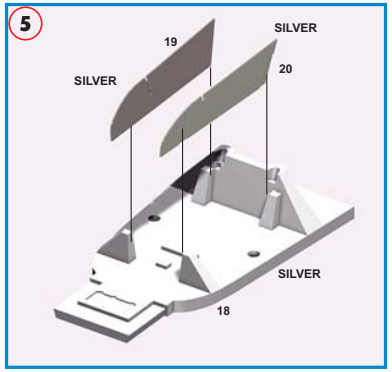

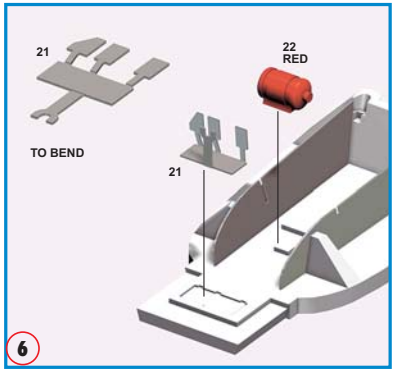

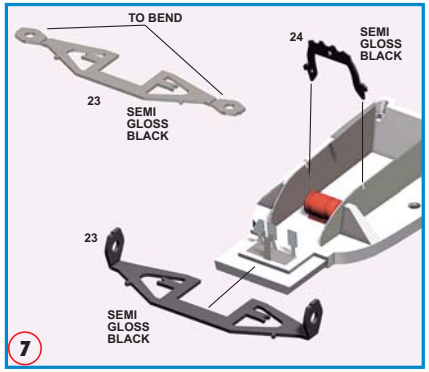

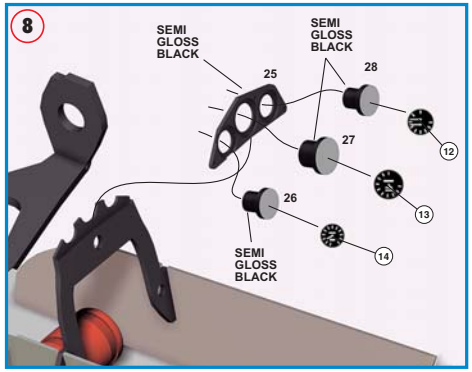

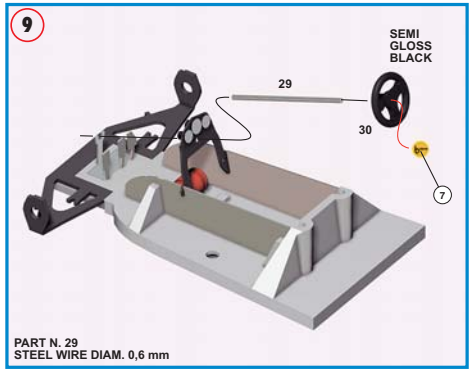

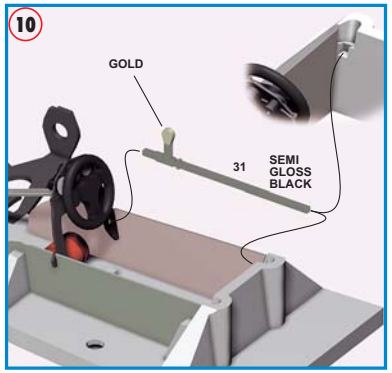
10
GOLD
31
SEMI GLOSS BLACK

11
21
32
MATT BLUE
21
SILVER
39
SEMI GLOSS BLACK
33
38
SILVER
34
37
35
36
SILVER
MATT BLUE

12
40
41

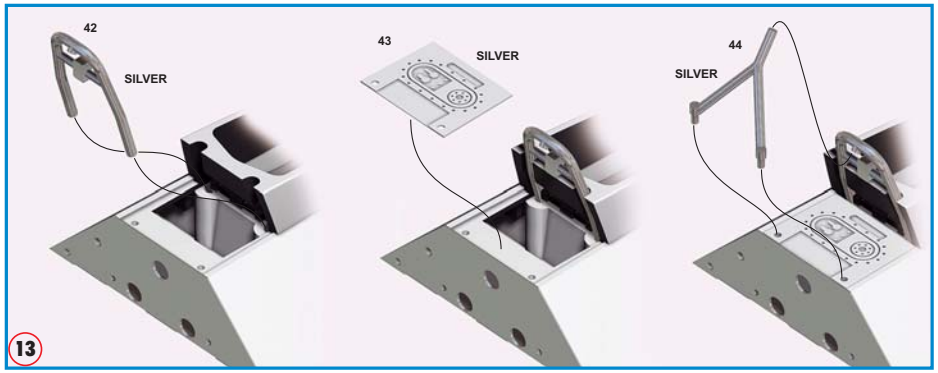
13
42
SILVER
43
SILVER
44
SILVER

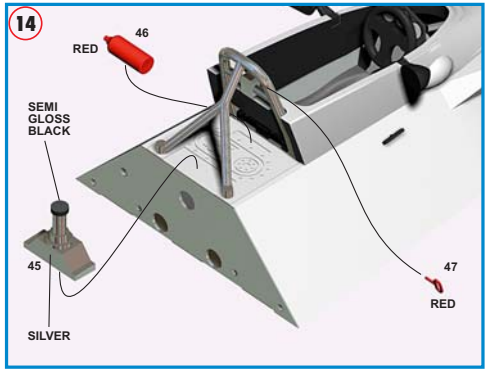
14
46
RED
SEMI GLOSS BLACK
45
SILVER
47
RED

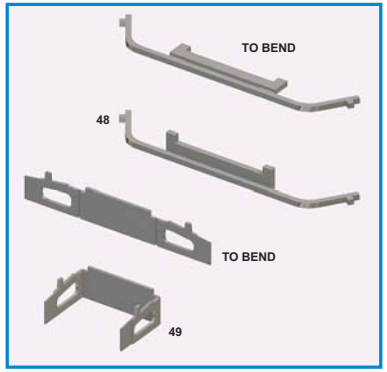
TO BEND
48
TO BEND
49

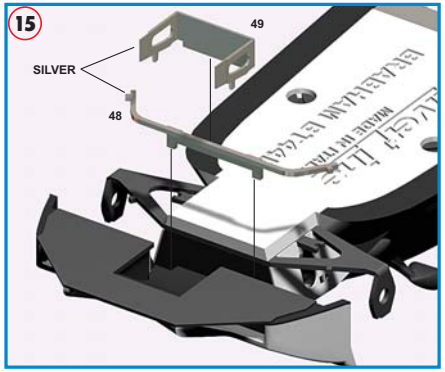
15
49
SILVER
48

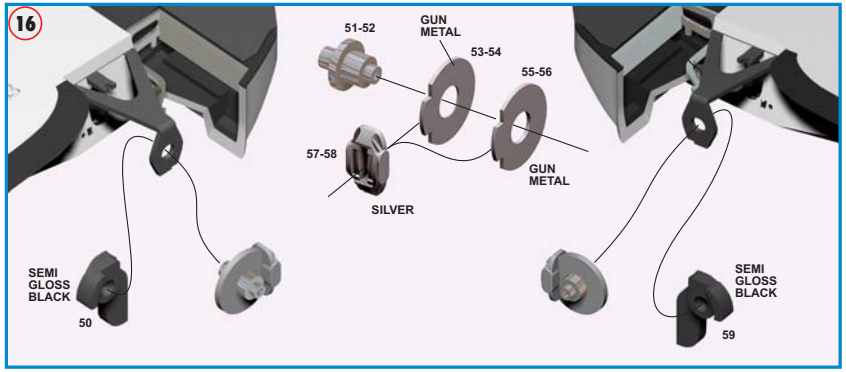
16
51-52
GUN METAL
53-54
55-56
57-58
GUN METAL
SILVER
SEMI GLOSS BLACK
50
SEMI GLOSS BLACK
59

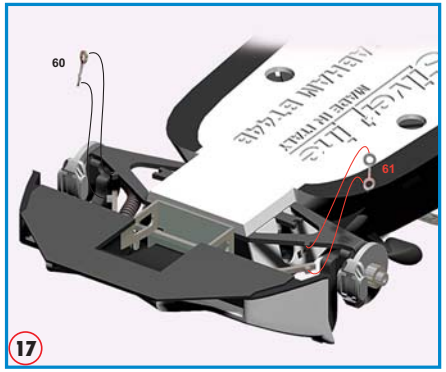
17
60
61

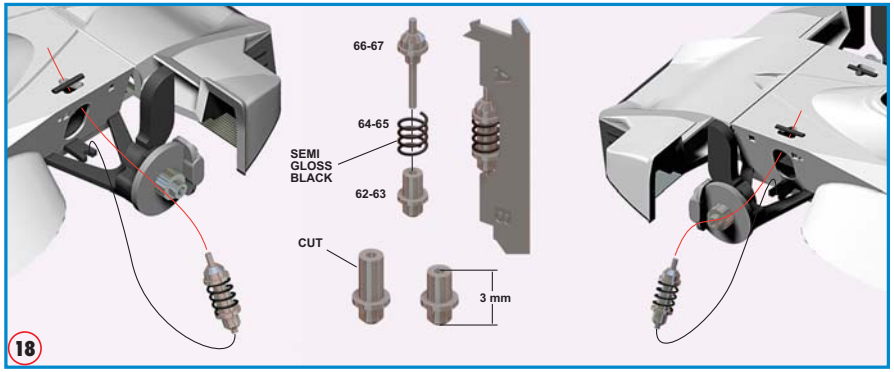
18
66-67
64-65
SEMI GLOSS BLACK
62-63
CUT
3 mm

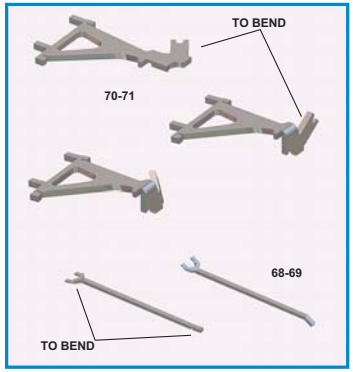
TO BEND
70-71
68-69
TO BEND

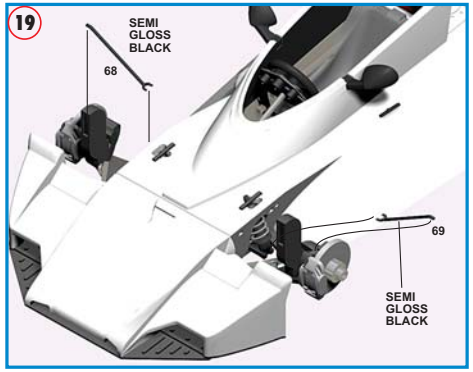
19
SEMI GLOSS BLACK
68
69
SEMI GLOSS BLACK

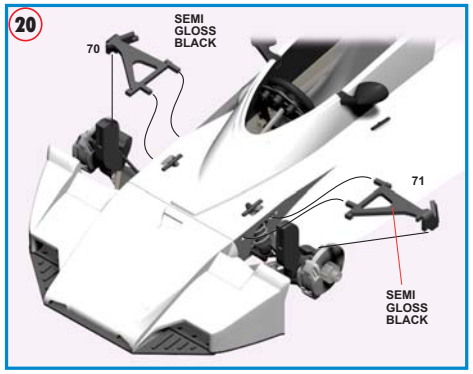
20
SEMI GLOSS BLACK
70
71
SEMI GLOSS BLACK

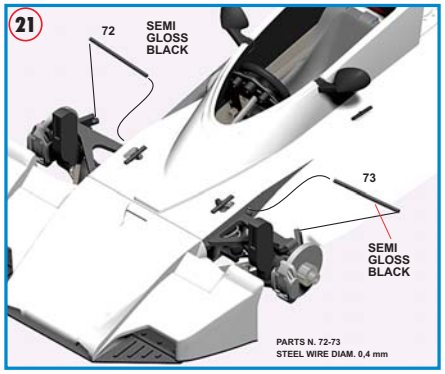
21
72
SEMI GLOSS BLACK
73
SEMI GLOSS BLACK
PARTS N. 72-73
STEEL WIRE DIAM. 0,4 mm

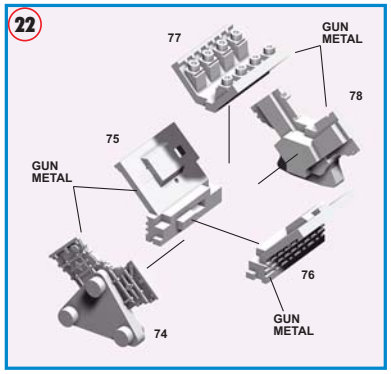
22
77
GUN METAL
78
75
GUN METAL
76
74
GUN METAL

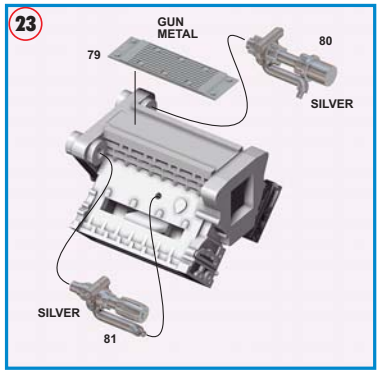
23
GUN METAL
79
80
SILVER
SILVER
81

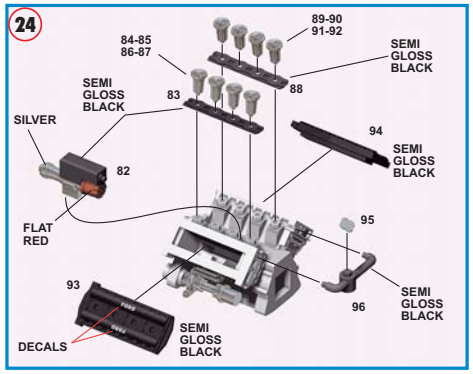
24
89-90
91-92
84-85
86-87
SEMI GLOSS BLACK
88
SEMI GLOSS BLACK
83
SILVER
94
SEMI GLOSS BLACK
82
FLAT RED
95
93
96
SEMI GLOSS BLACK
DECALS
SEMI GLOSS BLACK

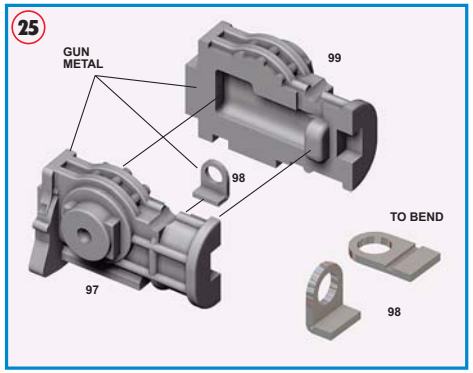
25
GUN METAL
99
98
TO BEND
97
98

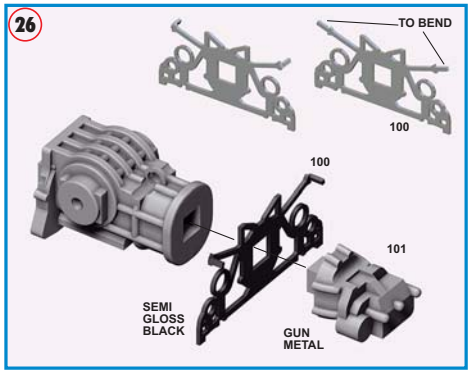
26
TO BEND
100
100
101
SEMI GLOSS BLACK
GUN METAL

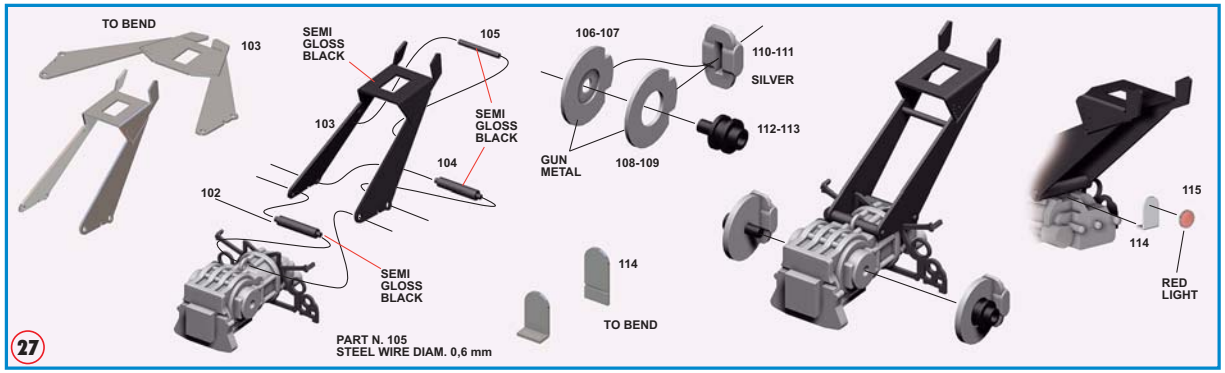
TO BEND
103
SEMI GLOSS BLACK
105
106-107
110-111
SILVER
103
SEMI GLOSS BLACK
112-113
104
GUN METAL
108-109
102
115
114
SEMI GLOSS BLACK
114
RED LIGHT
TO BEND
27
PART N. 105
STEEL WIRE DIAM. 0,6 mm

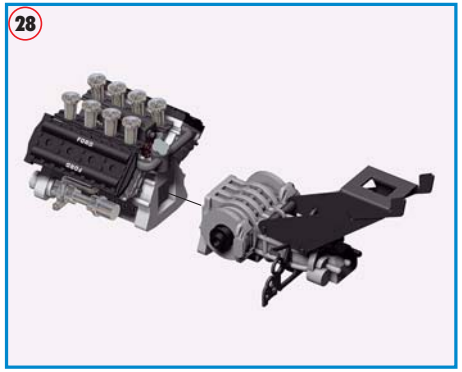
28

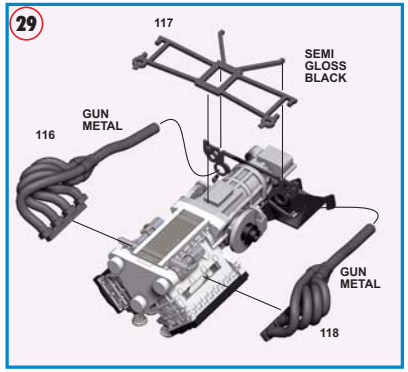
29
117
SEMI GLOSS BLACK
GUN METAL
116
GUN METAL
118

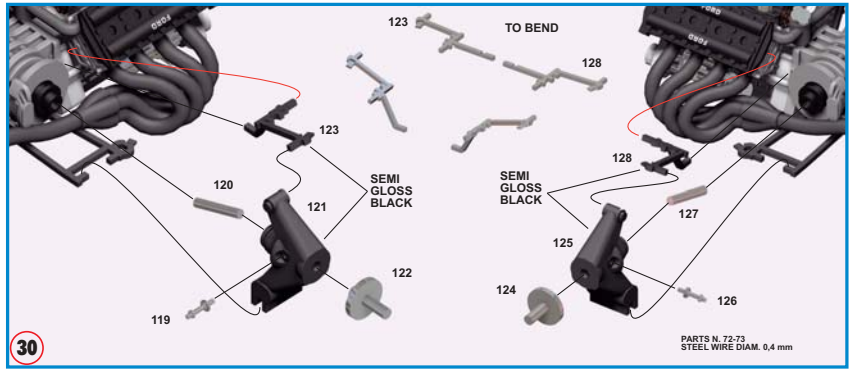
123
TO BEND
128
123
128
120
SEMI GLOSS BLACK
121
SEMI GLOSS BLACK
127
125
122
124
126
119
30
PARTS N. 72-73
STEEL WIRE DIAM. 0,4 mm

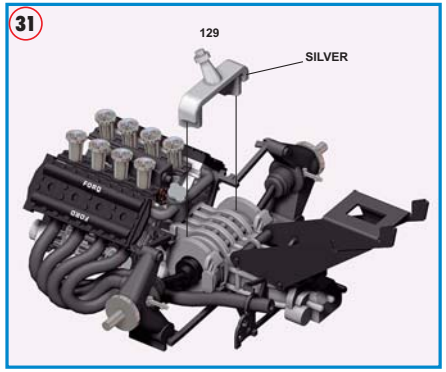
31
129
SILVER

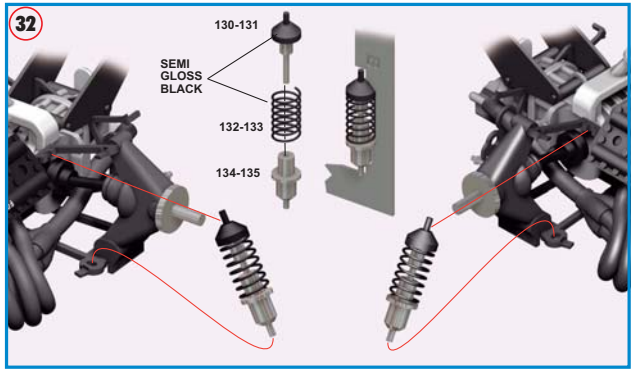
32
130-131
SEMI GLOSS BLACK
132-133
134-135

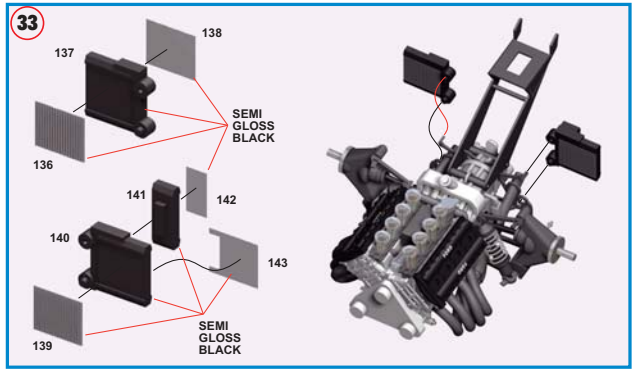
33
138
137
SEMI GLOSS BLACK
136
141
142
140
143
139
SEMI GLOSS BLACK

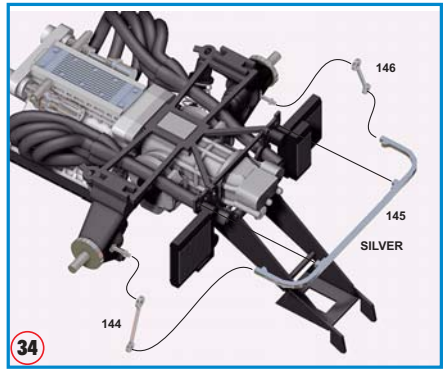
146
145
SILVER
144
34

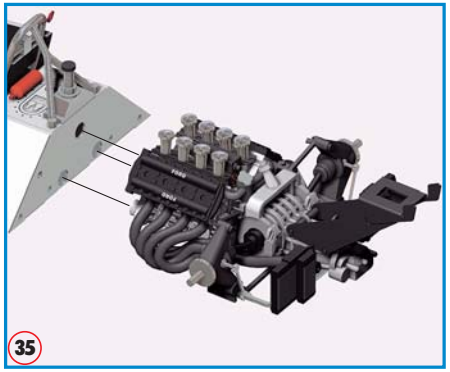
35

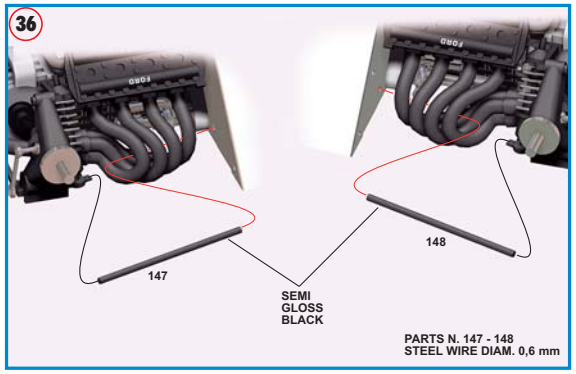
36
147
148
SEMI GLOSS BLACK
PARTS N. 147 - 148
STEEL WIRE DIAM. 0,6 mm

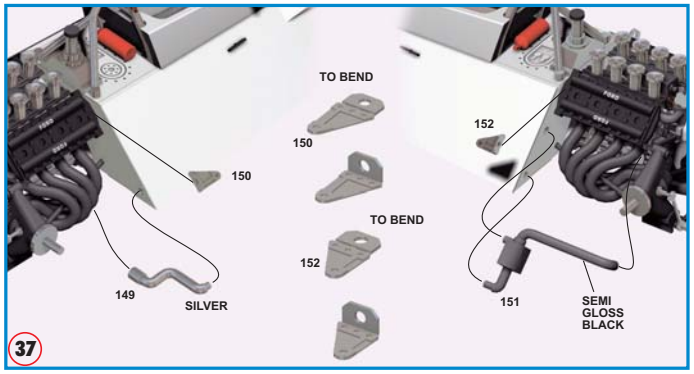
TO BEND
150
152
150
TO BEND
152
149
SILVER
151
SEMI GLOSS BLACK
37

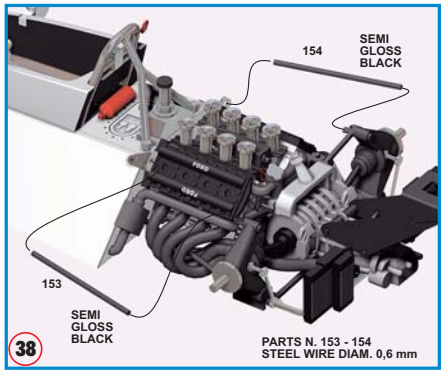
154
SEMI GLOSS BLACK
153
SEMI GLOSS BLACK
38
PARTS N. 153 - 154
STEEL WIRE DIAM. 0,6 mm

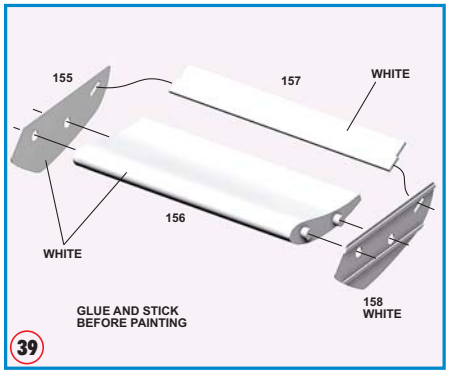
155
157
WHITE
156
WHITE
GLUE AND STICK BEFORE PAINTING
158 WHITE
39

40
159-160
161-162
SILVER
163-164
165-166
167-168
169-170
SILVER
171-172
173-174

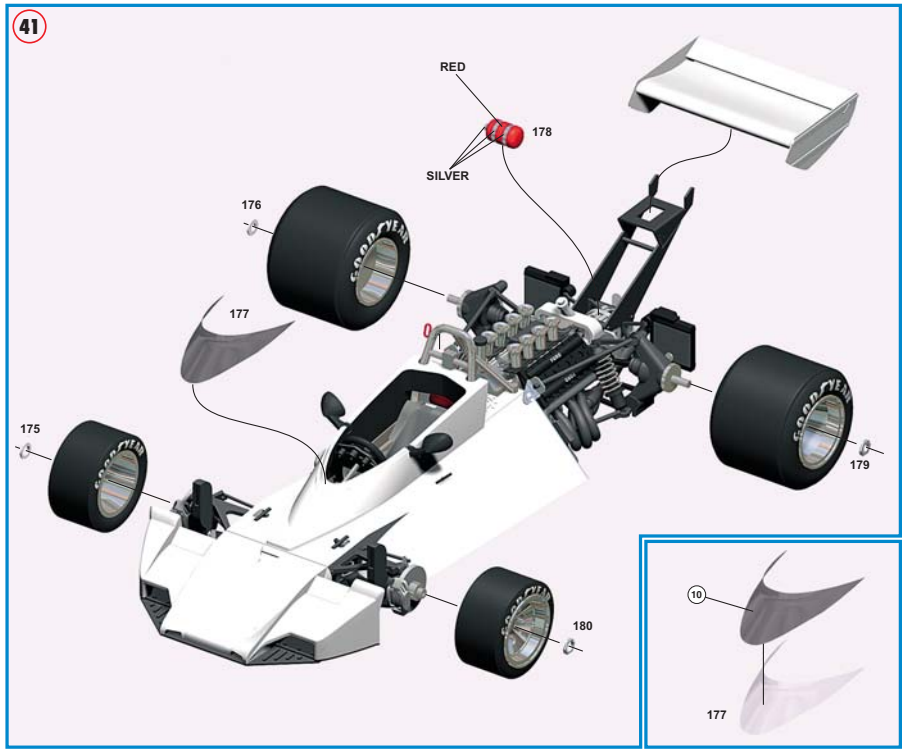
41
RED
178
SILVER
176
177
175
179
180

10
177

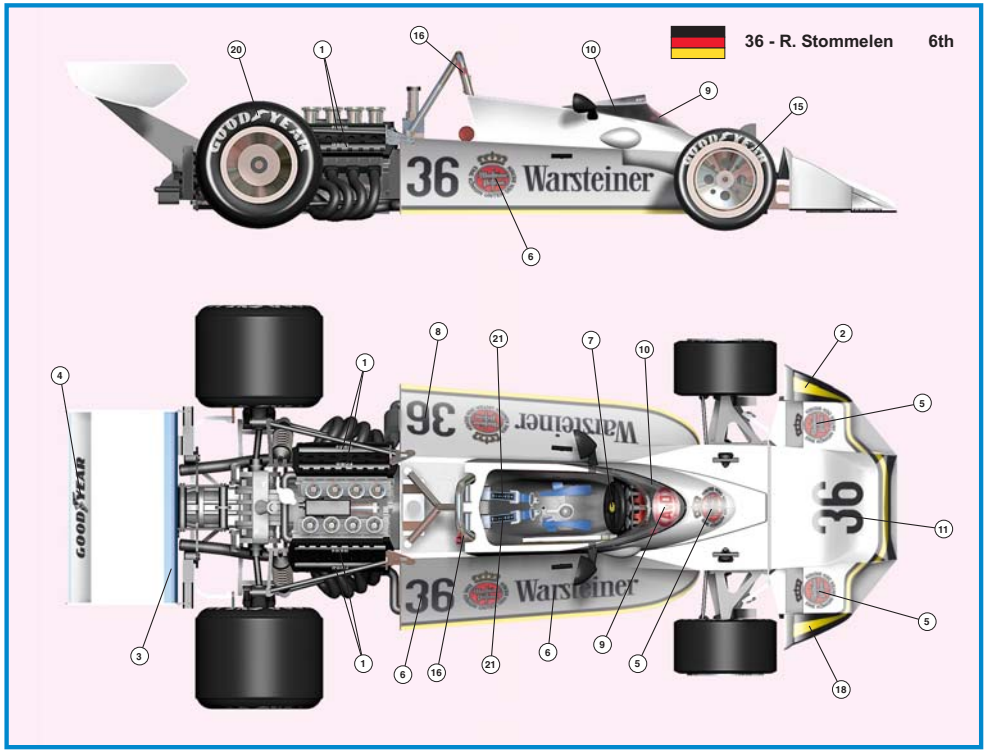
36 - R. Stommelen 6th
Warsteiner
36
GOODYEAR

36
AvD

Warsteiner
36
GOODYEAR